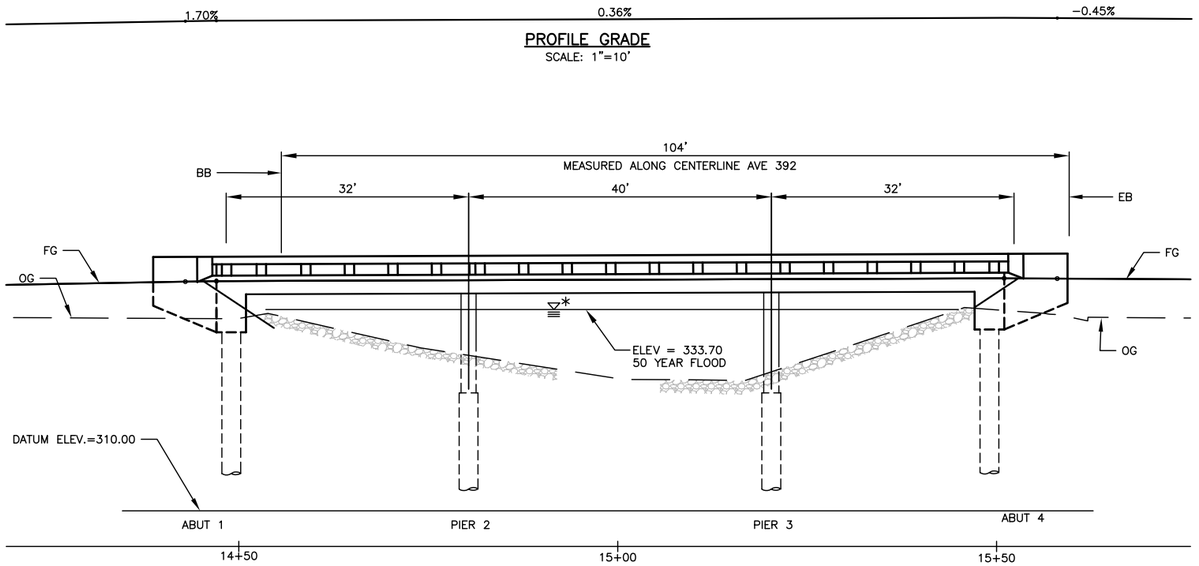

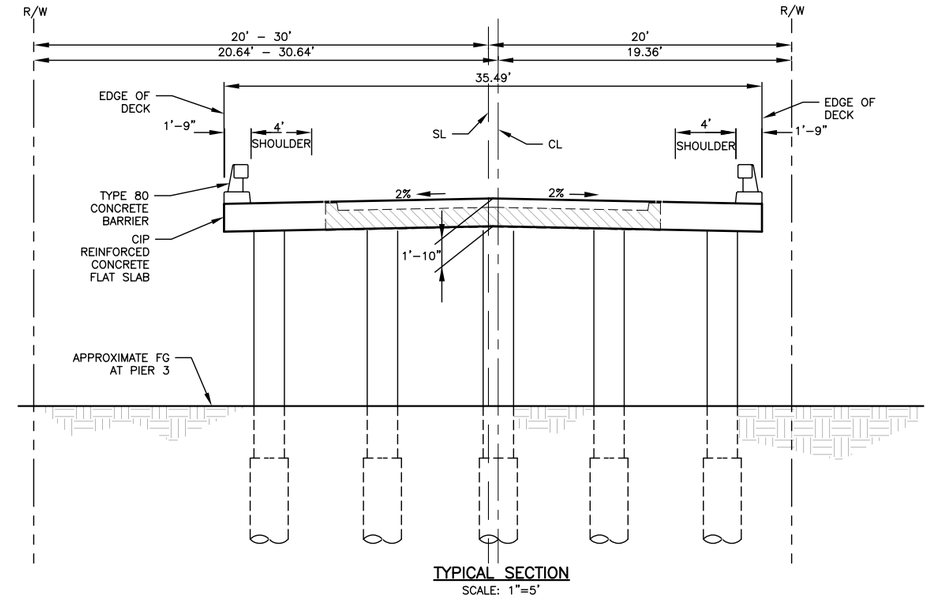

PILE DATA 30" CIDH PILE							
LOCATION	PILE TYPE	DESIGN LOADING (KIPS)	NOMINAL RESISTANCE (KIPS)		CUTOFF ELEVATION (FT)	DESIGN TIP ELEVATION (FT)	SPECIFIED TIP ELEVATION (FT)
			COMPRESSION	TENSION			
ABUT 1	24" DIA CIDH PILES			–			
PIER 2	24" DIA CIDH PILES			–			
PIER 3	24" DIA CIDH PILES			–			
ABUT 4	24" DIA CIDH PILES			–			

NOTES:

1. DESIGN TIP ELEVATION IS CONTROLLED BY THE FOLLOWING DEMANDS
   1.) COMPRESSION
   2.) TENSION
   3.) LATERAL
2. REQUIRED CAPACITY IS BASED ON WSO METHOD FO THE ABUTTMENTS, AND THE LRFD METHOD AT THE PIERS

INDEX TO BRIDGE PLANS

SHEET TITLE	TITLE
S1	GENERAL PLAN
S2	DECK CONTOURS
S3	FOUNDATION PLAN
S4	ABUTMENT & PIER LAYOUT
S5	ABUTMENT & PIER DETAILS
S6	TYPICAL SECTION
S7	SLAB DETAILS
S8	LOG OF TEST BORING

STANDARD PLANS DATED MAY 2006

A-10A	ABBREVIATIONS
B11-60	CONCRETE BARRIER TYPE 80

BENCHMARK:

SET CHISELED "X" AT THE NORTHEAST CORNER OF WEIR STRUCTURE ON THE SOUTH SIDE OF AVENUE 392.
ELEV.=331.18

LEGEND

- DIRECTION OF TRAVEL
- EXIST STRUCTURE TO BE REMOVED
- NEW CONSTRUCTION

NOTES:

1. FOR GENERAL NOTES, SEE "DECK CONTOURS" SHEET.
2. SEE ROAD PLANS FOR CHANNEL GRADING.
3. SEE ROAD PLANS FOR ROCK SLOPE PROTECTION.
4. SEE ROAD PLANS FOR GUARDRAIL.

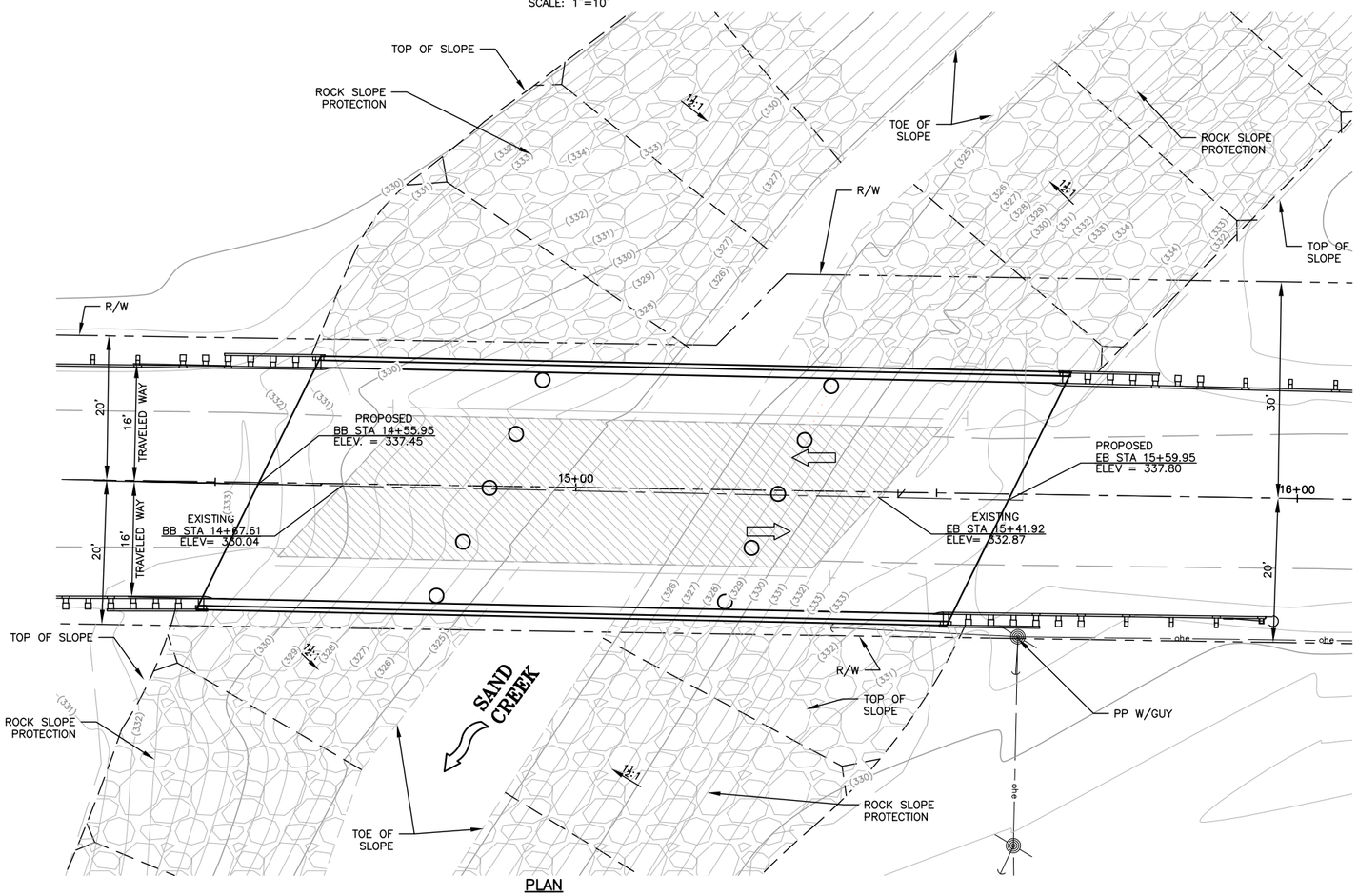

N

SCALE: 1" =10'
0 5 10 20

REGISTERED PROFESSIONAL ENGINEER
JASON KYLE VIVIAN
No. 75448
Exp. 3-31-14
CIVIL
STATE OF CALIFORNIA

REVISIONS

No.	DESCRIPTION	DATE	BY

TULARE COUNTY
RESOURCE MANAGEMENT AGENCY
5961 SOUTH MOONEY BLVD.
VISALIA, CA 93277
(559)624-7000
WWW.TULARECOUNTY.CA.GOV/RMA

GENERAL PLAN

AVENUE 392 SAND CREEK BRIDGE REPLACEMENT

TULARE COUNTY

SCALE	PER PLAN
DIVISION	DESIGN
JOB NO.	28000010
DESIGNED	SB
DRAWN	GSD
CHECKED	PAO
FILE	12016-1S001.DWG
DATE	06-20-2013

SHEET No.
S1
– OF –

M:\PROJECTS\12016-1\12016-1S001.DWG 8/23/2013 11:49 AM